1

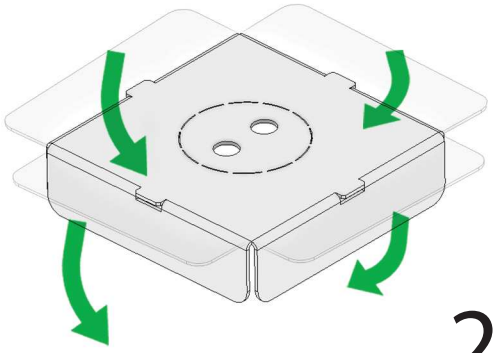

2x

2

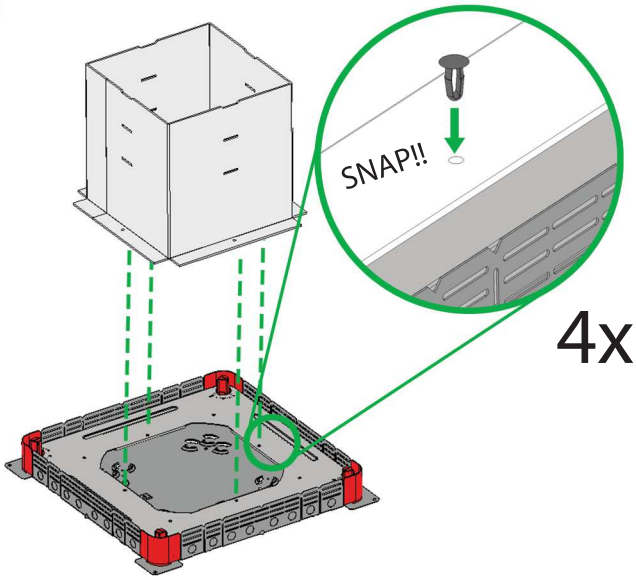

4x

3

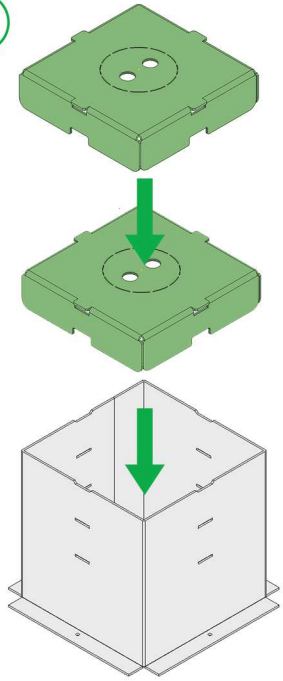

=

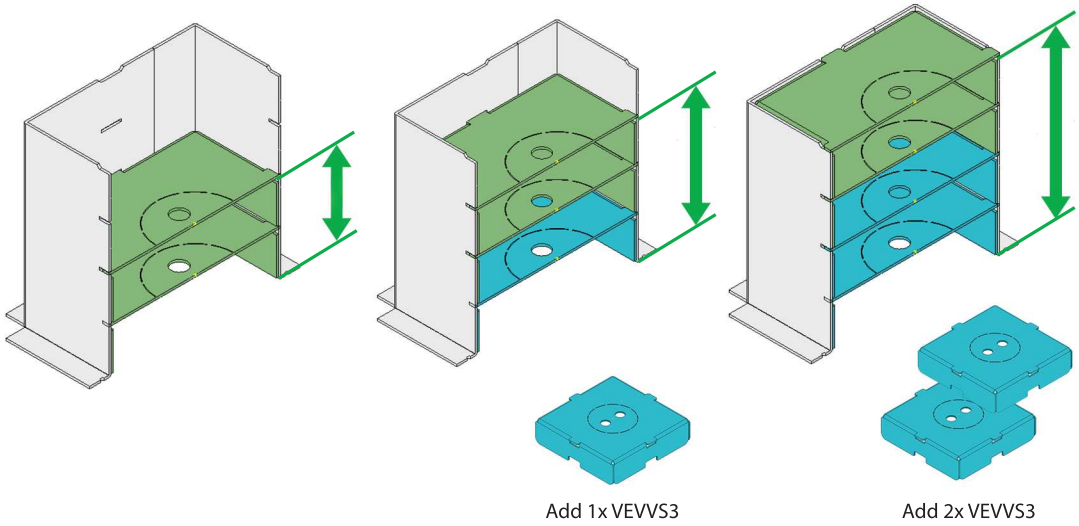

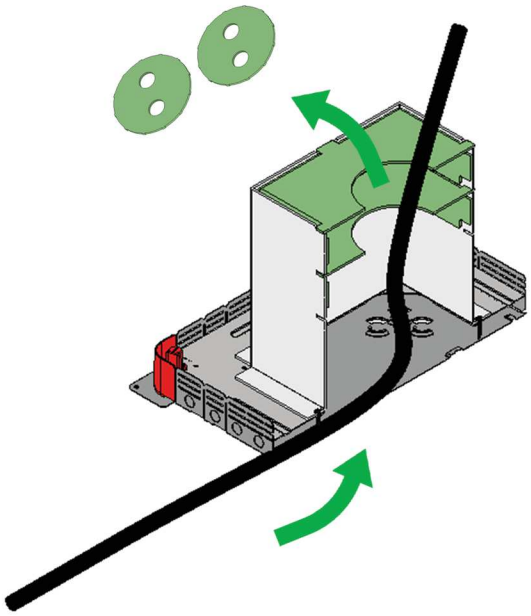

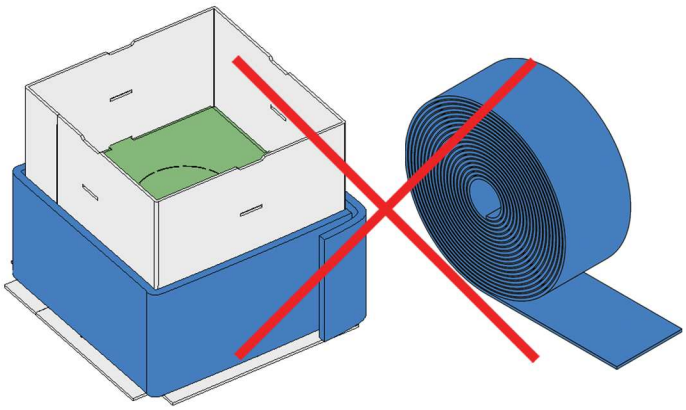

Atkore Vergokan

Product Information Manual
VEVV3

PIMVEVV3 REV: 1 Date: 27-10-22

UK CA CE