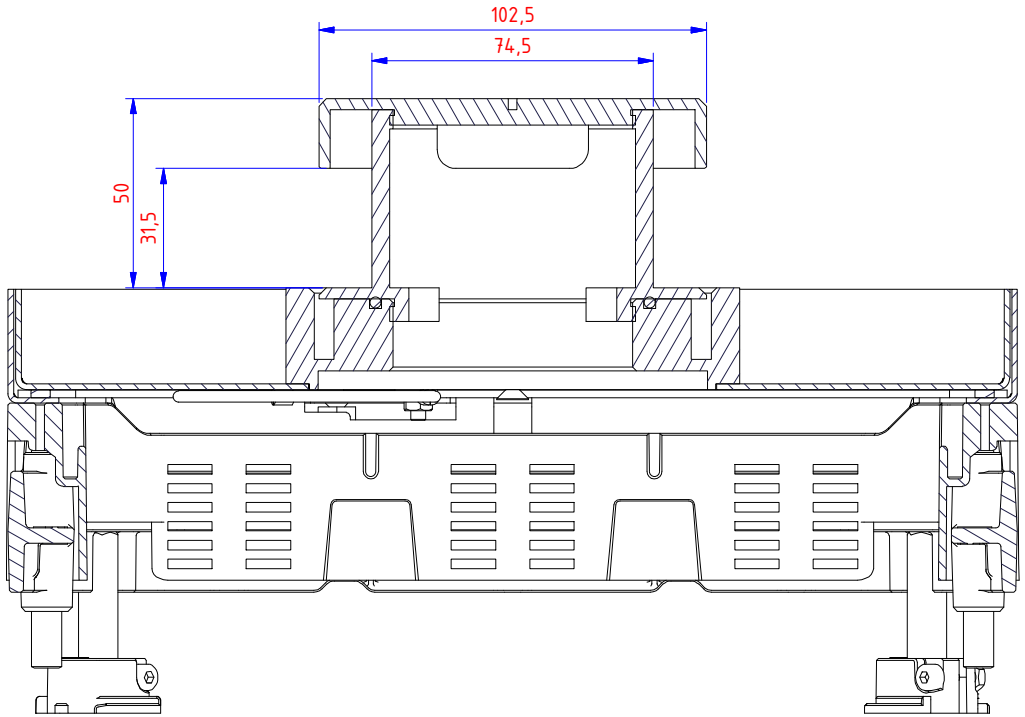

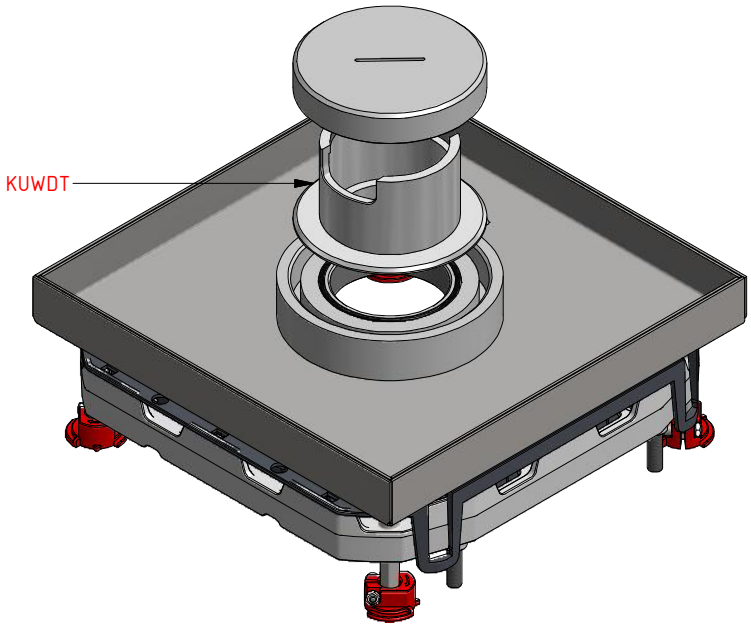

X.X = Inspection Dimension

Ref.	DVITWD3	Name			Scale:	Adapt drawing exclusively with CAD	
Drawn	delombel	Deksel vierkant waterdichte kabeluitgang [DVITWD3]					
Date	22/06/2014						VLOER
Material:	Tolerance:	Standard:	I.S.O. SYMBOL		DRAWING NUMBER	FORM	P. 1
-	ISO 2768-1 (see table)				KUWDT in DVITWD3	A4	1 P.

VERGOKAN
Meersbloem Melden 16
9700 Oudenaarde
Tel: 055/31.83.35
Fax: 055/31.43.88