item	qty	drawing	reference	description
1	1	45481	[2BKIE25]	Bevestigingsklem voor (HD)KLIE
2	1	45392	[HDRB6.20]	lock bolt toothed mushroom head with slot
3	1	45472	[HDRM6]	Flange nut

Parts list

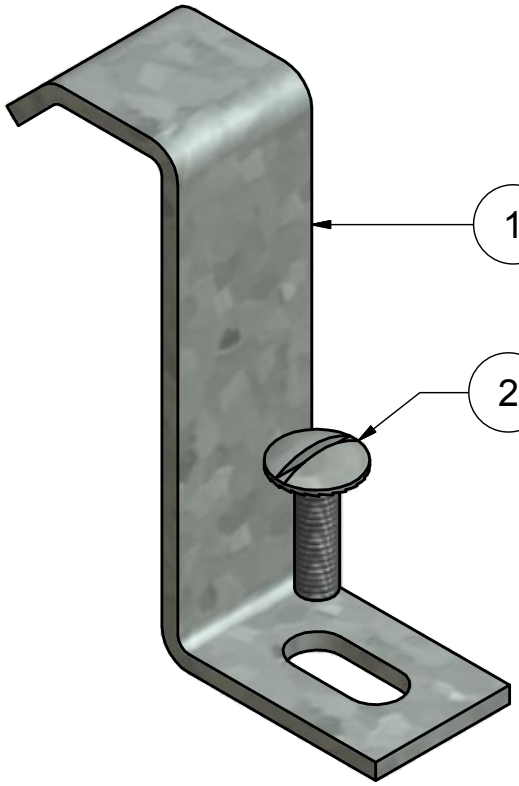

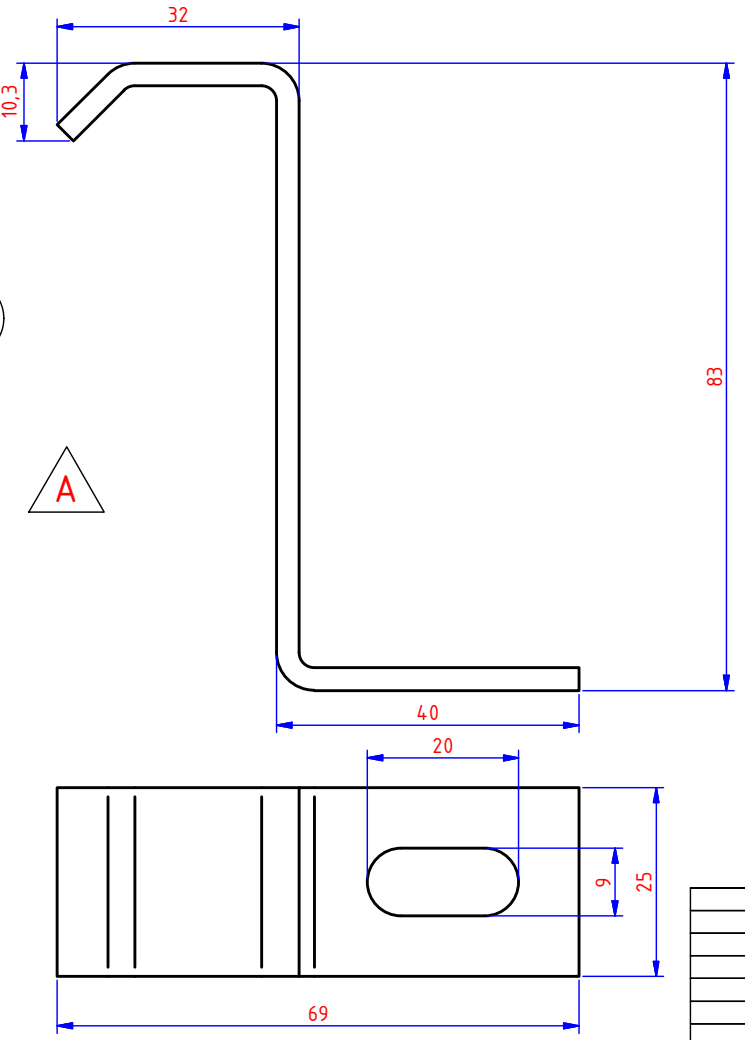

Material thickness: 3,00mm

NOT FOR PRODUCTION

Number	Edition	Description of the modification	Date	Visum
1	A	Alle deelproducten HD (zie WF HD bouten en moeren 22/10/09)	27/10/09	

Ref.	HDBKIE25	Name Bevestigingsklem voor (HD)KLIE [HDBKIE25]		
VISUM				
Date	3/06/1998			
Material:	Tolerance:	Standard:	I.S.O. SYMBOL	
1.0037 (Hot-dip)	-	-		

VERGOKAN

Meersbloem Melden 16
9700 Oudenaarde

Tel: 055/31.83.35
Fax: 055/31.43.88

Scale:	Adapt drawing exclusively with CAD	
1/1		KL
DRAWING NUMBER 45482	FORM A4	P. 1 / 1 P.