Ref.	L	H
(HD)WSU100	127,5	60,14
(HD)WSU150	177,5	66,37
(HD)WSU200	227,5	72,6
(HD)WSU250	277,5	78,82
(HD)WSU300	327,5	85,05
(HD)WSU400	427,5	97,5
(HD)WSU500	527,5	109,95
(HD)WSU600	627,5	122,4
I6WSU100	127,5	60,14
I6WSU150	177,5	66,37
I6WSU200	227,5	72,6
I6WSU250	277,5	78,82
I6WSU300	327,5	85,05
I6WSU400	427,5	97,5
I6WSU500	527,5	109,95
I6WSU600	627,5	122,4

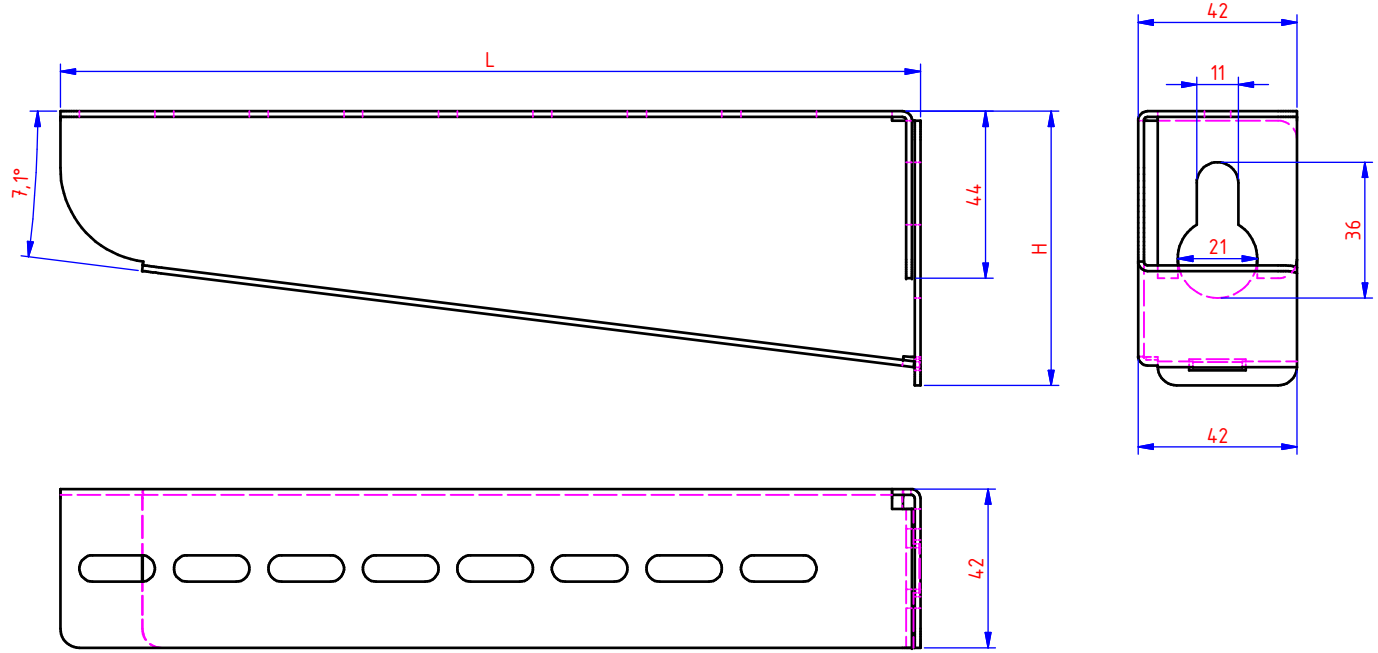

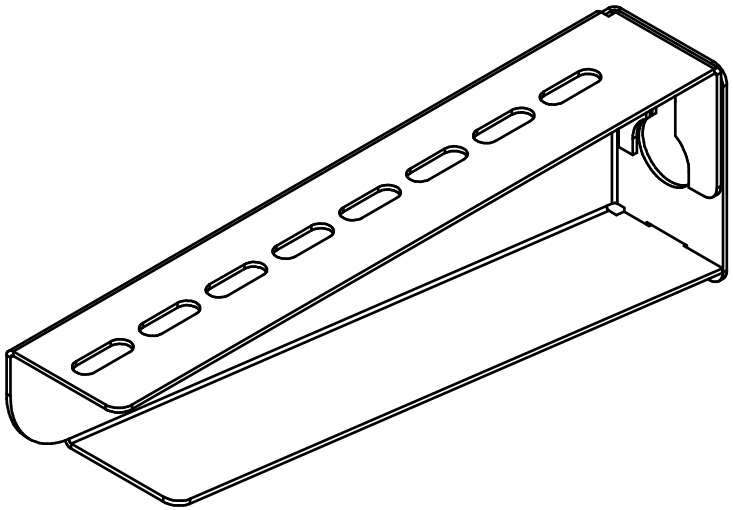

NOT FOR PRODUCTION

Material thickness: 1,50 mm±10%

Number	Edition	Description of the modification	Date	By

Ref.	WSU---, I6WSU---	Name		Scale:	Adapt drawing exclusively with CAD
Drawn	Paul Note	Universal support bracket [WSU200]		1 : 2	MONT
Date	20/02/2013				
Material:	Tolerance:	Standard:	I.S.O. SYMBOL	DRAWING NUMBER	FORM
1.0226 (DX51 Pregalva.)	-			45827	A4

VERGOKAN
Meersbloem Melden 16
9700 Oudenaarde
Tel: 055/31.83.35
Fax: 055/31.43.88