I6P1941
Fitting flat 5D14

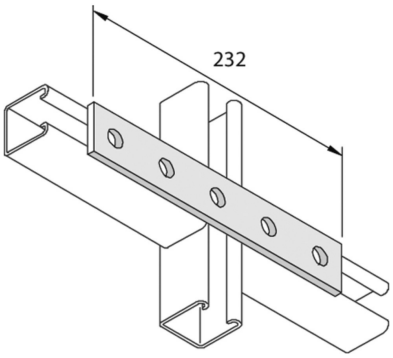

Standard finish								Stainless Steel 316	
HD	Reference	↕ mm	↔ mm	→‖← mm	⇄ mm	kg/stk	⬚	Stock	Unit
-	**I6P1941**		40		232	0,375	20		STK

To order per full packaging.