HDP1546

Fitting angle 45° 2D14

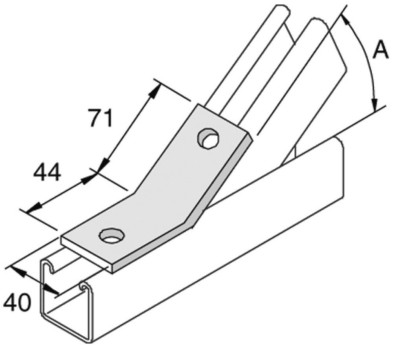

Standard finish				Hot-dip galvanised					
HD	Reference	↕ mm	↔ mm	→‖← mm	⇄ mm	kg/stk	⬚	Stock	Unit
-	**HDP1546**		40			0,188	10	X	STK

A = 45°

To order per full packaging.