WSUN

Universal support bracket

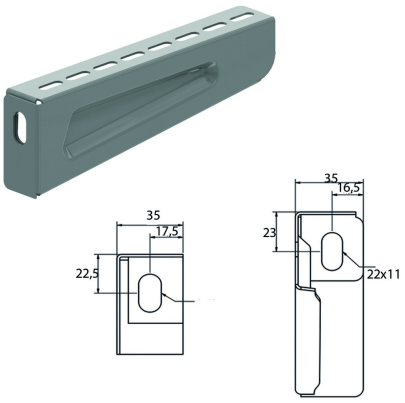

For direct fixing to walls and ceiling profiles

	Max. load (in daN)
WSUN100	120
WSUN150	120
WSUN200	120
WSUN300	120
WSUN400	120

Reference	Finish	↕ mm	↔ mm	→‖← mm	⇄ mm	kg/stk		Unit
WSUN100	SZ	53	117			0,130	12	STK
WSUN200	SZ	69	217			0,257	12	STK
WSUN300	SZ	81	317			0,388	12	STK
WSUN400	SZ	93	417			0,534	6	STK
ZMWSUN100	DF	53	117			0,130	12	STK
ZMWSUN200	DF	69	217			0,257	12	STK
ZMWSUN300	DF	81	317			0,388	12	STK
ZMWSUN400	DF	93	417			0,534	6	STK

Max. load (in daN): uniformly distributed over complete width of cantilever brackets.

Legend finish
- SZ = Sendzimir
- DF = Defender