P2750/1

Channel trolley assembly

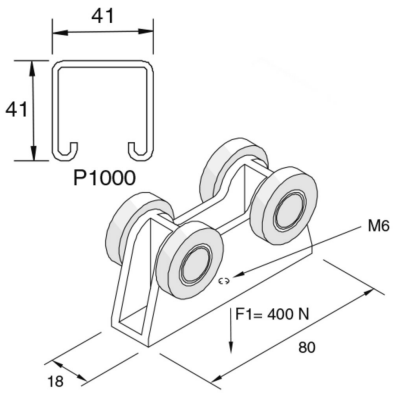

Reference	↕ mm	↔ mm	→‖← mm	⇄ mm	kg/stk	⬚	Unit
P2750/1				80	0,221	1	STK

POM (polyacetal)