I6SN

Sliding nut for supporting profile

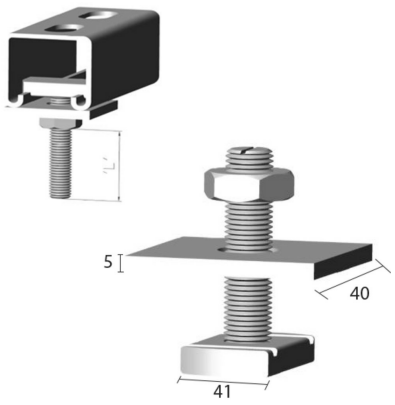

Reference	↕ mm	↔ mm	→‖← mm	⇄ mm	kg/stk	📦	Unit
M8X40SNSS		35			0,234	100	STK
M10X40SNSS		35			0,339	100	STK
M12X40SNSS		35			0,117	100	STK