P3301SPP
Assembly profile

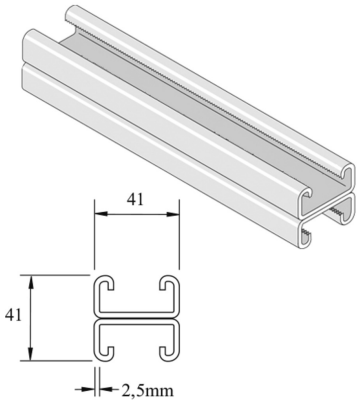

Reference	↕ mm	↔ mm	→‖← mm	⇄ mm	kg/m	⬡	Unit
P3301SPP	41	41	2,5	6000	3,916	6	M
P3301SPPX3000	41	41	2,5	3000	3,792	3	M

Pickled and passivated. Stainless steel 316.