item	qty	drawing	reference	description
1	1	45873	[0VSCL41.60]	Verbindingsstuk clipsbaar
2	1	HDB 8x70 (DIN 933)	[HDB8.70]	Bout
3	1	HDM 8	[HDM8]	Moer

Parts list

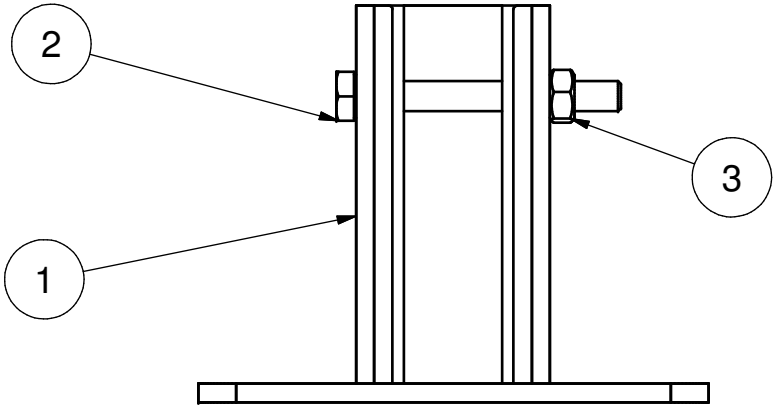

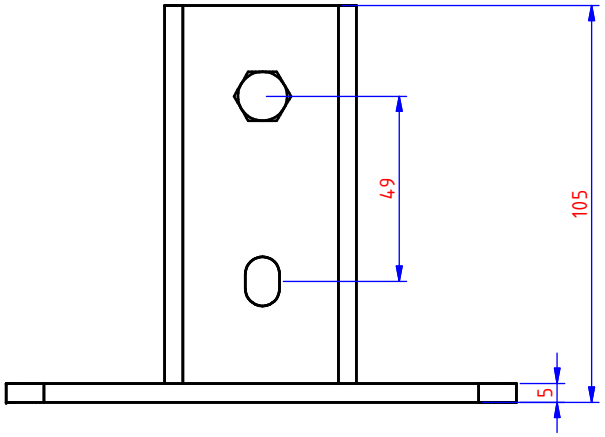

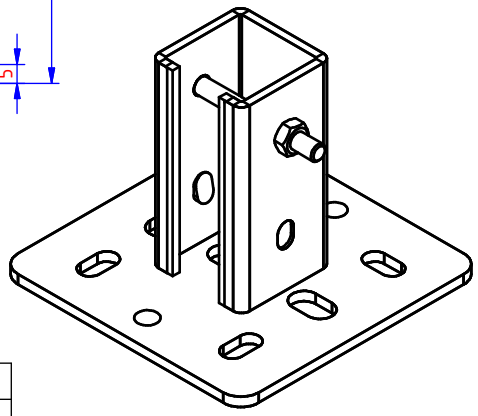

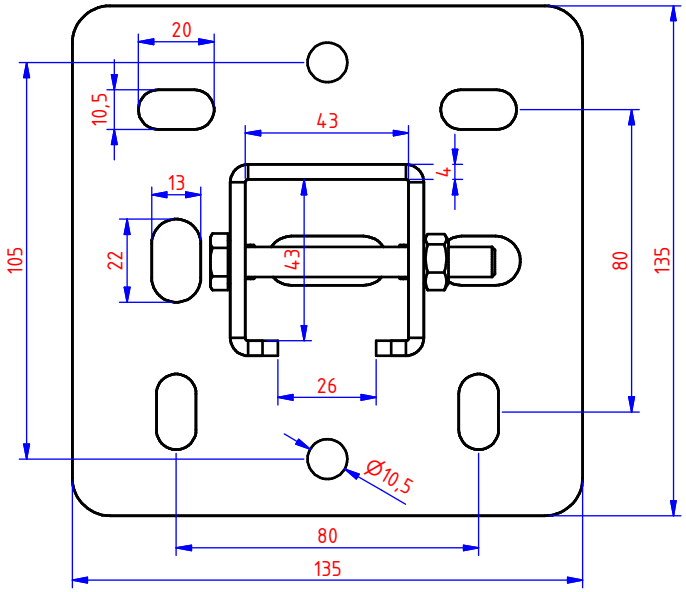

Ref.	Material
VSCL41.60	1.0037 (Sendzimir)
HDVSCL41.60	1.0037 (Hot-dip)

NOT FOR PRODUCTION

Number	Edition	Description of the modification	Date	By

Ref.	HDVSCL41.60	Name Clipsbaar verbindingsstuk [HDVSCL41.60]	VERGOKAN Meersbloem Melden 16 9700 Oudenaarde Tel: 055/31.83.35 Fax: 055/31.43.88	Scale: 1 : 2	Adapt drawing exclusively with CAD
Drawn	colpaest				
Date	6/05/2014				MONT
Material:	Tolerance:	Standard:	I.S.O. SYMBOL	DRAWING NUMBER 45872	FORM A4
hot-dip					P. 1 2 P.