B-B (1 : 4)

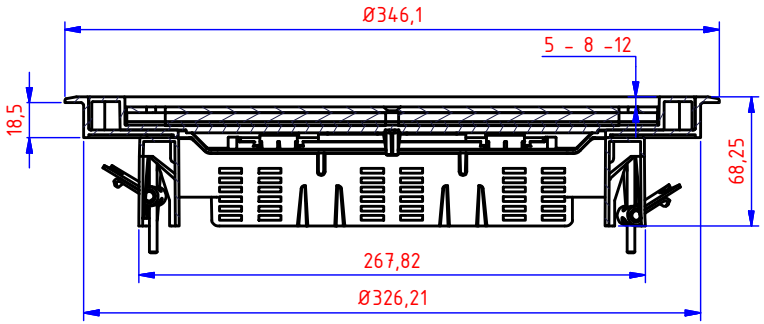

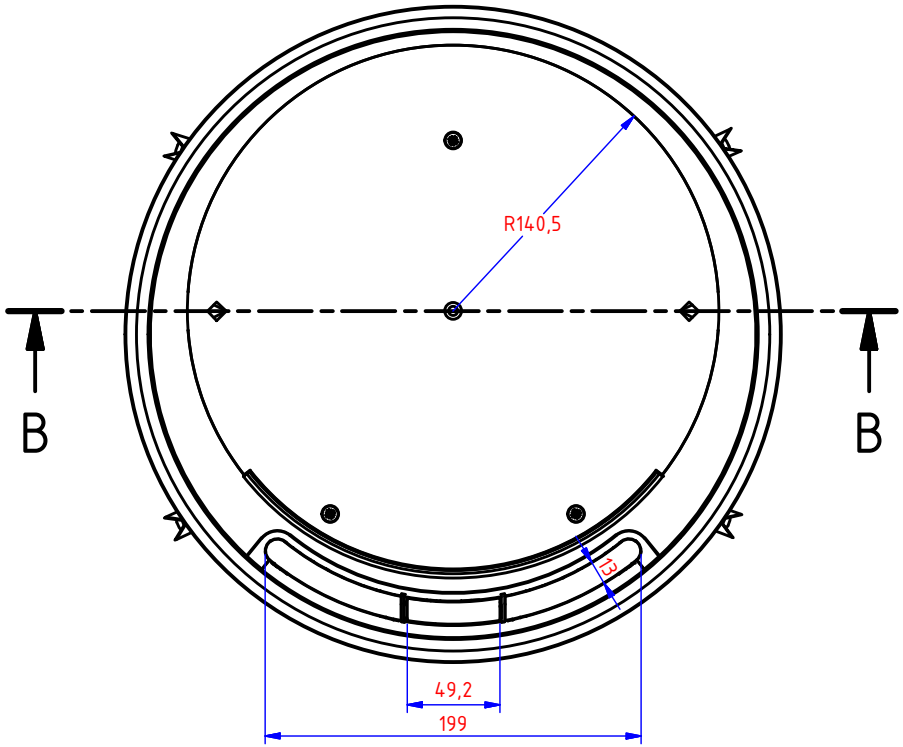

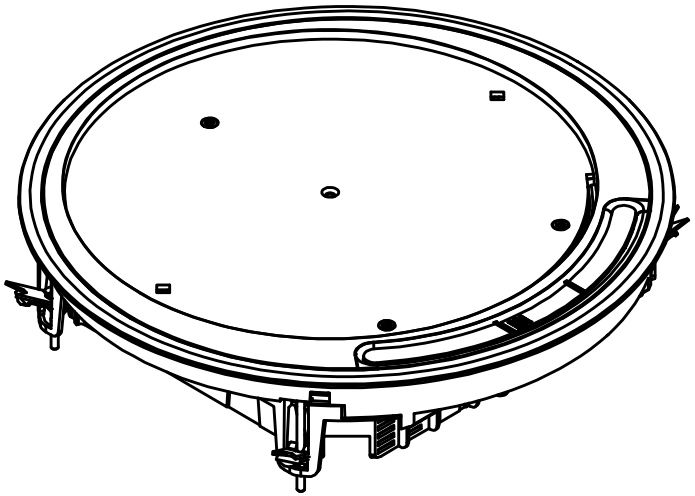

NOT FOR PRODUCTION

Number	Edition	Description of the modification	Date	By
	B	Neuwe 1DKUK + DIN EN ISO 7046-1 Z M4x65-4.8	5/11/2016	Yuriy
2	A	Klapdeksel voorzien van 3 schroefgaten voor montage inlegplaat	10/12/2014	SC

Ref.	KDRKK3	Name Klapdeksel rond universeel [KDRKK3.5-7011]		Scale: 1 : 4	Adapt drawing exclusively with CAD
Drawn	colpaest				
Date	3/07/2014				
Material:	Tolerance:	Standard:	I.S.O. SYMBOL	DRAWING NUMBER 45966	FORM A4
-					P. 1 4 P.

VERGOKAN
Meersbloem Melden 16
9700 Oudenaarde
Tel: 055/31.83.35
Fax: 055/31.43.88