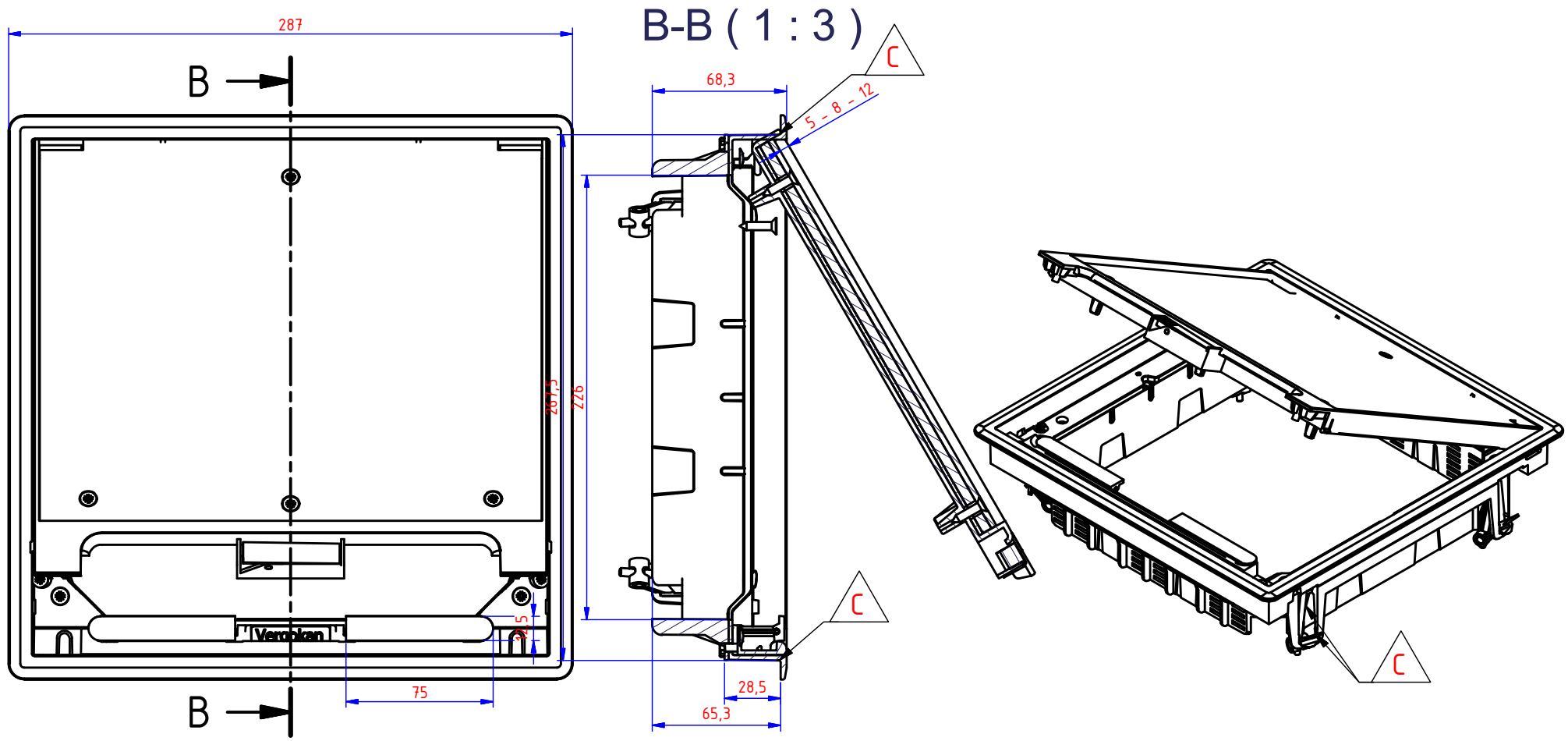

NOT FOR PRODUCTION

Ref.	A	B	I
KDVKK3.5-7011	1	2	5
KDVKK3.5-9011	1	2	5
KDVKK3.8-7011	0	3	8
KDVKK3.8-9011	0	3	8
KDVKK3.12-7011	0	1	12
KDVKK3.12-9011	0	1	12

Number	Edition	Description of the modification	Date	By
	C	OKVK3- changed R0.5 to R1.2+ bouten 3BZ4.65+ neuwe 1DKUK.01RFK	06/04/2016	Yuriy
	B	Versteviging van deksel aan schroefgaten	10/12/2014	sc
3	A	Aanpassing diameter gaten - aanpassing buitenvorm inlegplaat	6/06/2014	ed

Ref.	KDVKK3
Drawn	delombel
Date	21/05/2014

Name
Klapdeksel Vierkant Universeel
[KDVKK3.5-7011]

Material:	Tolerance:	Standard:	I.S.O. SYMBOL
		EN 50085	

VERGOKAN
Meersbloem Melden 16
9700 Oudenaarde
Tel: 055/31.83.35
Fax: 055/31.43.88

Scale: 1 : 3

Adapt drawing exclusively with CAD

VLOER

DRAWING NUMBER 45898

FORM A4

P. 3 / 4 P.