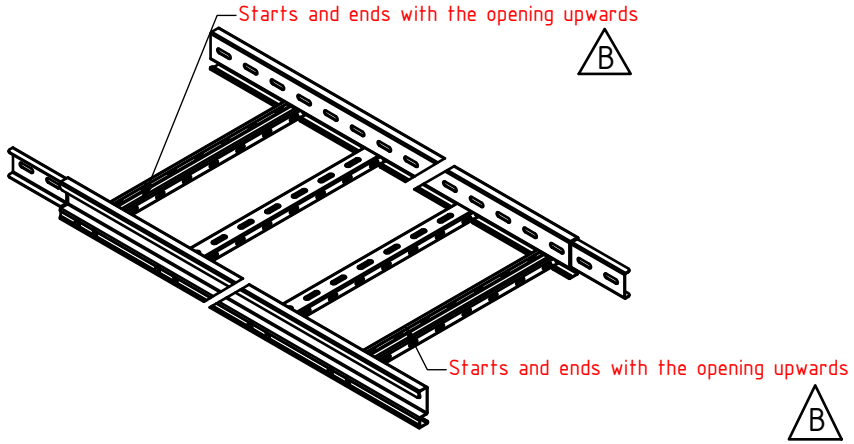

Opening in the rungs are alternating at top and bottom side.

Front view

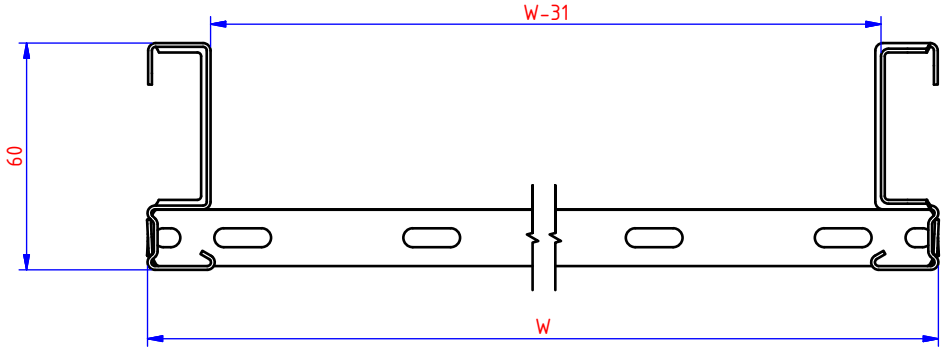

Side view

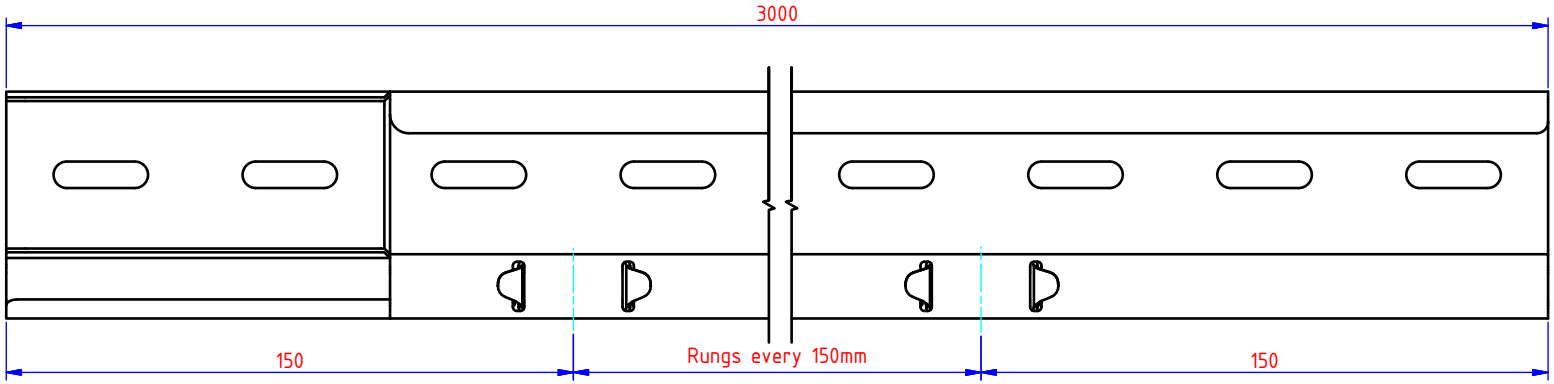

NOT FOR PRODUCTION

Ref.	W
KLLIBS60.150	150
KLLIBS60.200	200
KLLIBS60.300	300
KLLIBS60.400	400

Ref.	Material
KLLIBS60.---	1.0226 (DX51 Pregalva.)
HDKLLIBS60.---	1.0226 (DX51 hot dip)

Number	Edition	Description of the modification	Date	By
	B	Oriëntation of the sports has changed	28/06/2018	vannieto
1	A	rung tichness 1.25 mm instead of 1 mm for all ladder width (PSC 28/04/2015)	28/04/2015	LA

Ref.	KLLIBS60.---	Name		
Drawn	Stijn Colpaert	Cable ladder interlocking ends (BS) [KLLIBS60.400]		
Date	30/08/2013			
Material:	Tolerance:	Standard:	I.S.O. SYMBOL	
1.0226 (DX51 Pregalva.)	-	-		

VERGOKAN

Meersbloem Melden 16
9700 Oudenaarde
Tel: 055/31.83.35
Fax: 055/31.43.88

Scale: 1 : 2	Adapt drawing exclusively with CAD	BRAND
DRAWING NUMBER 45922	FORM A4	P. 2 / 3 P.