item	qty	drawing	reference	description
1	8	VM 6x10	[VM6.10]	Zelfborgende moer en bout DIN 50 961
2	2	100-ZKKLL 85 1m	[1ZKKLL85]	Zijkant KLL85
3	4	45786	[KLLDSV85]	Vertikale scharnier voor KLL85
4	4	100-SPORTKLL 300 omgeplooid	[KLLSPORT300]	Sport voor KLL --

Parts list

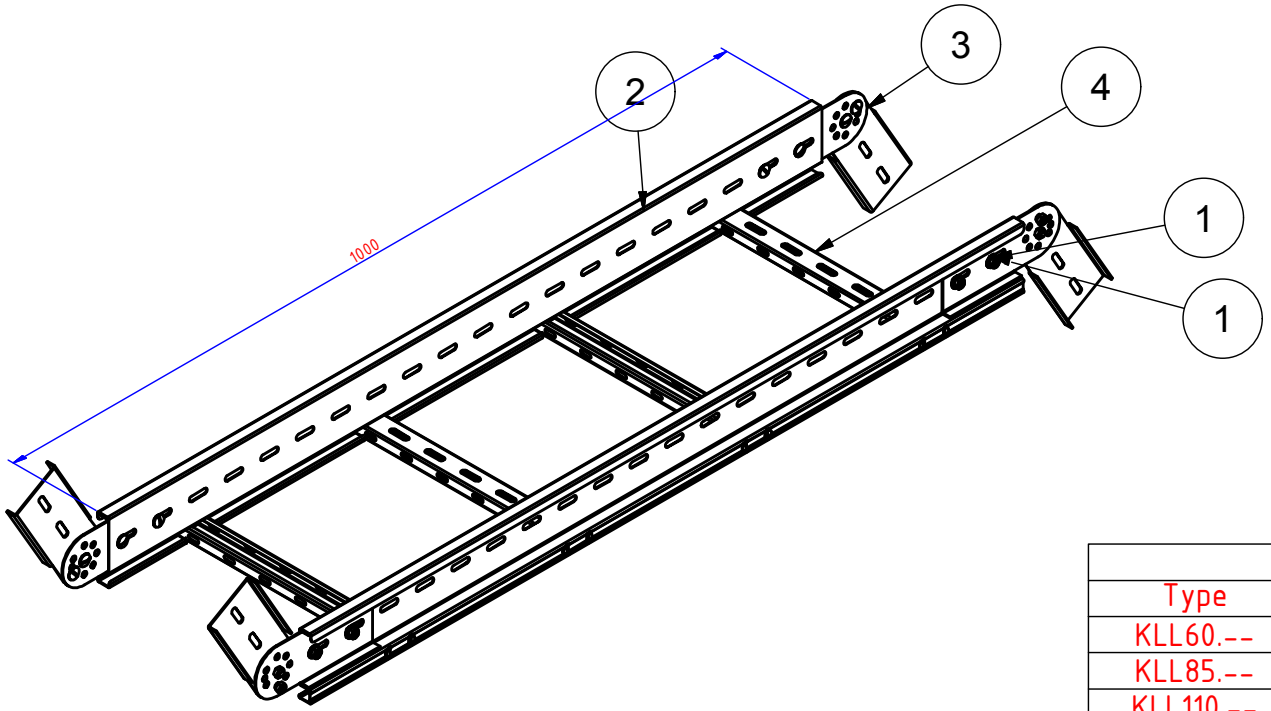

Component table		
Type	POS 2	POS 3
KLL60.--	ZKKLLI60 1m	KLLDSV60
KLL85.--	ZKKLL85 1m	KLLDSV85
KLL110.--	ZKKLL110 1m	KLLDSV110

NOT FOR PRODUCTION

Materiaal : Sendzimir of HD

Number	Edition	Description of the modification	Date	By

Ref.	KLLVSB--.--	Name		
Drawn	aelvoelu	Val- en stijgbocht voor KLL-- [KLLVSB85.300]		
Date	5/03/2013			
Material:	Tolerance:	Standard:	I.S.O. SYMBOL	
-				

VERGOKAN

Meersbloem Melden 16
9700 Oudenaarde

Tel: 055/31.83.35
Fax: 055/31.43.88

Scale:

Adapt drawing exclusively with CAD

KL

DRAWING NUMBER 45793

FORM A4

P. 1

1 P.