item	qty	drawing	description
1	1	-	rubber damping ring
2	1	M10 ring	galvanised steel ring

Parts list

C-C (2/1)

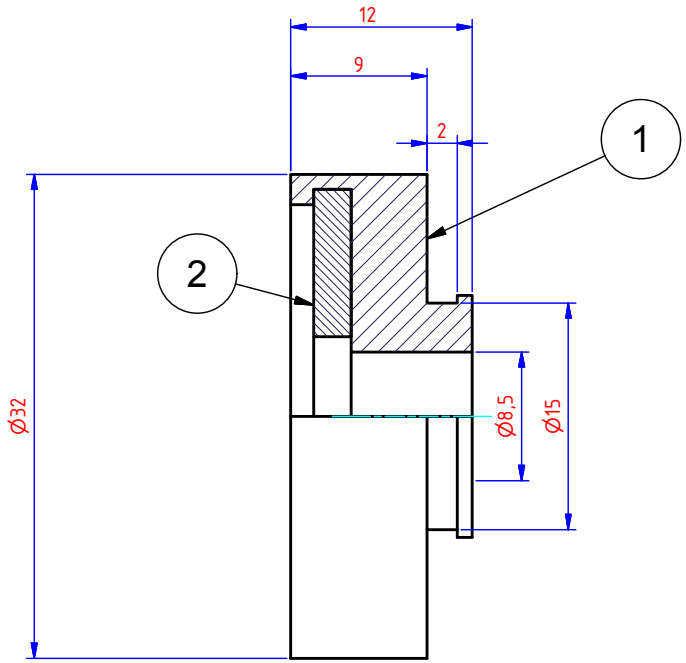

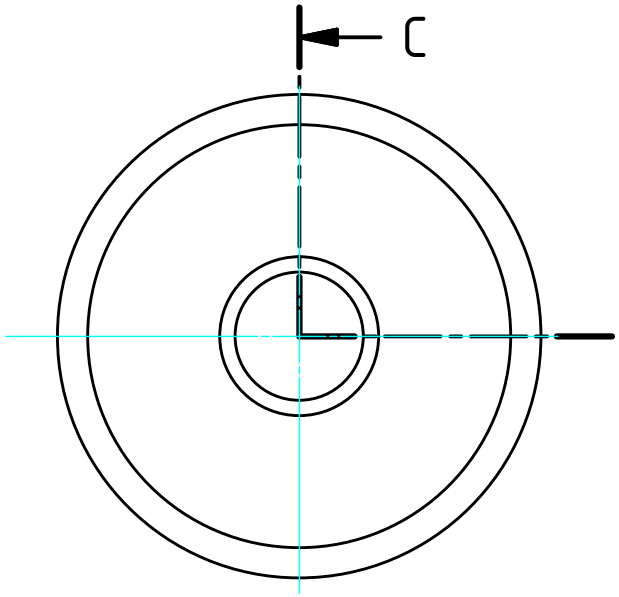

NOT FOR PRODUCTION

X.X = Inspection Dimension

Number	Edition	Description of the modification	Date	By

Ref.	ROTD8	Name Rondel trillingsdempend M8 [ROTD8]	VERGOKAN Meersbloem Melden 16 9700 Oudenaarde Tel: 055/31.83.35 Fax: 055/31.43.88	Scale: 2/1	Adapt drawing exclusively with CAD
Drawn	colpaest				MONT
Date	18/03/2014				
Material:	Tolerance:	Standard:	I.S.O. SYMBOL	DRAWING NUMBER 45846	FORM A4
-					P. 2 2 P.