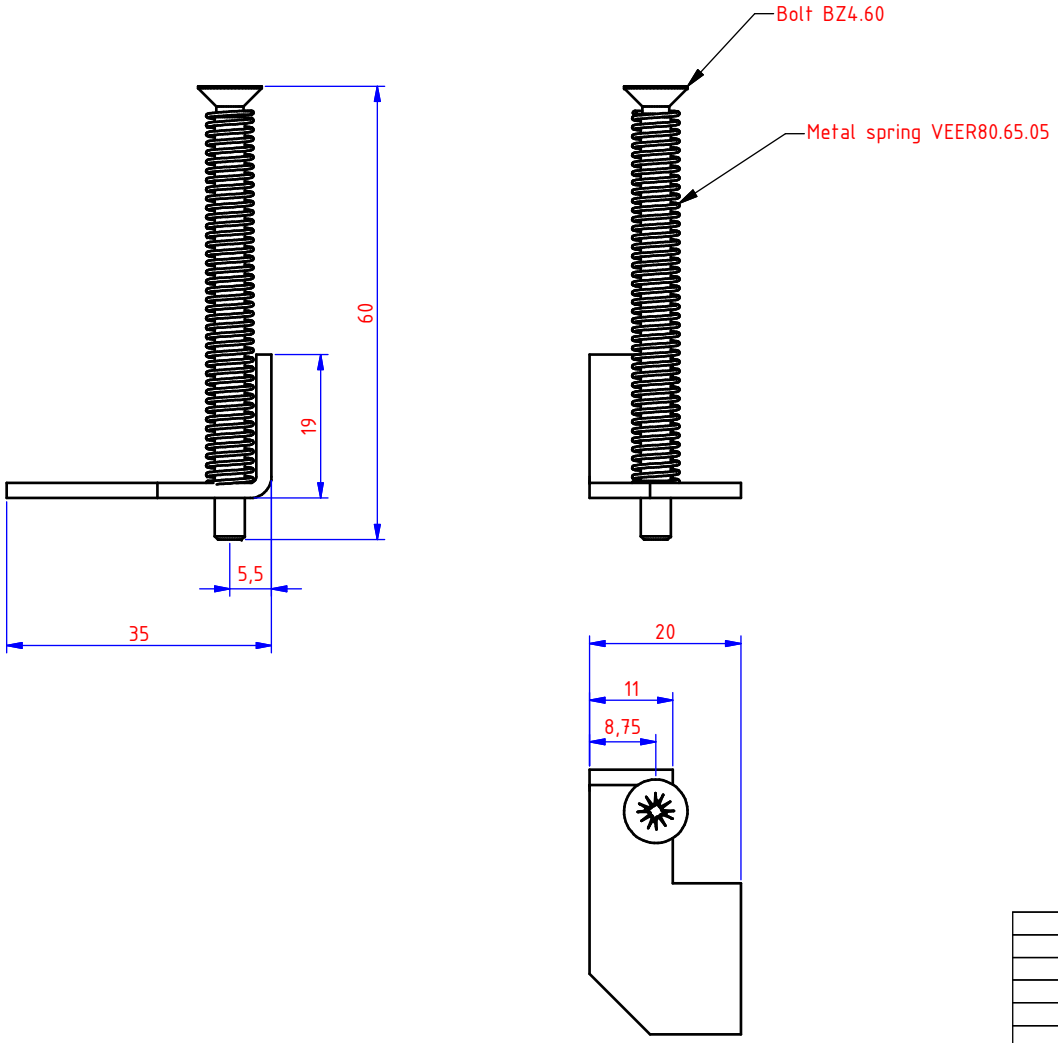

NOT FOR PRODUCTION

Number	Edition	Description of the modification	Date	By

Ref.	VDK4.30.60	Name Vloerdoosklem [VDK4.30.60]			
Drawn	colpaest				
Date	18/03/2013				
Material:	Tolerance:	Standard:	I.S.O. SYMBOL		
1.0226 (DX51 Pregalva.)	-				

VERGOKAN

Meersbloem Melden 16
9700 Oudenaarde
Tel: 055/31.83.35
Fax: 055/31.43.88

Scale: 1 : 1	Adapt drawing exclusively with CAD		VLOER
DRAWING NUMBER 45821		FORM A4	P. 2 / 2 P.