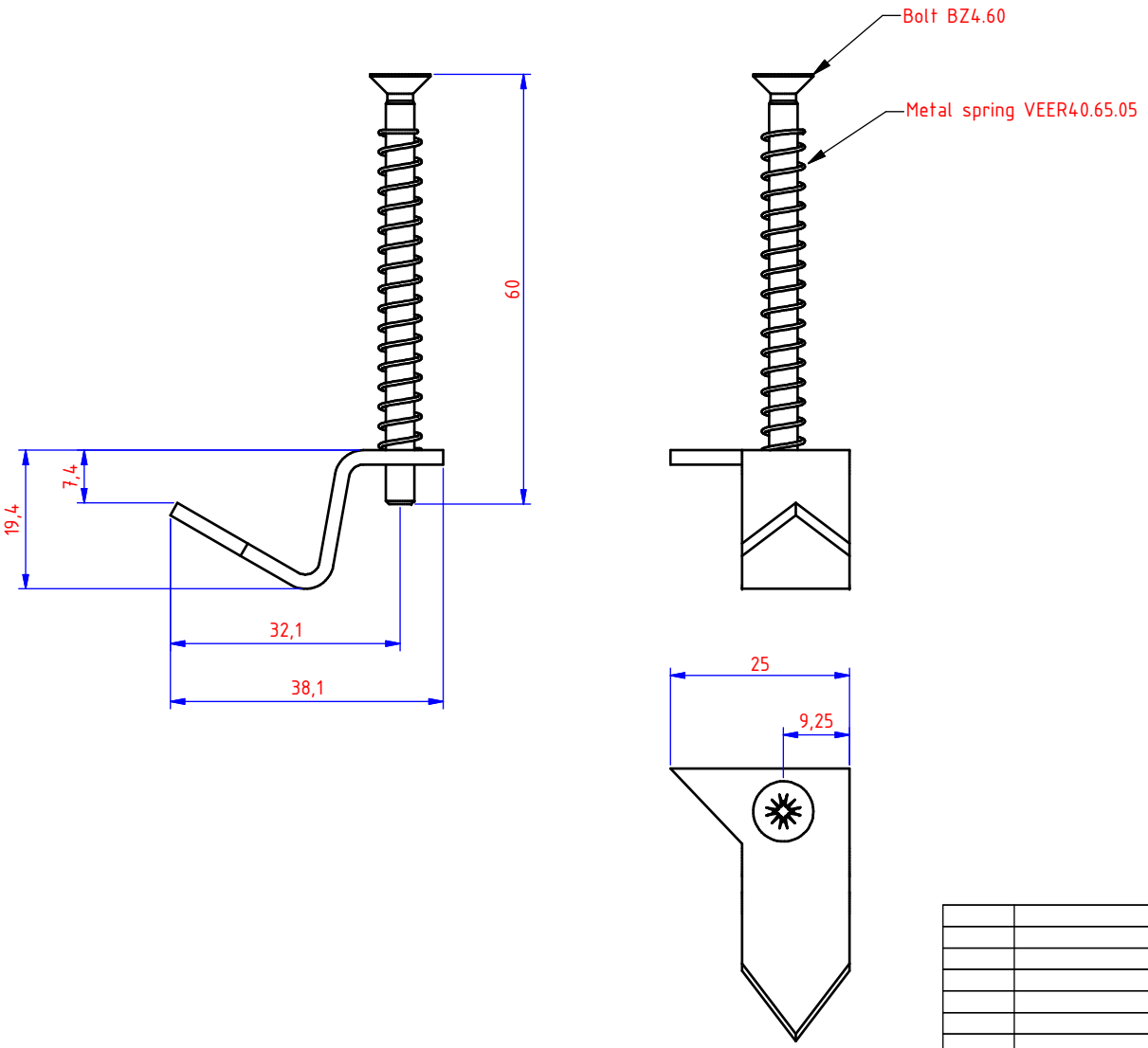

NOT FOR PRODUCTION

Number	Edition	Description of the modification	Date	By

Ref.	VDK4.35.70	Name			
Drawn	colpaest	Vloerdoosklem			
Date	18/03/2013	[VDK4.35.70]			
Material:	Tolerance:	Standard:	I.S.O. SYMBOL		
1.0226 (DX51 Pregalva.)	-				

VERGOKAN

Meersbloem Melden 16
9700 Oudenaarde

Tel: 055/31.83.35
Fax: 055/31.43.88

Scale:	Adapt drawing exclusively with CAD		
1 : 1			VLOER
DRAWING NUMBER		FORM	P. 2
45822		A4	2 P.