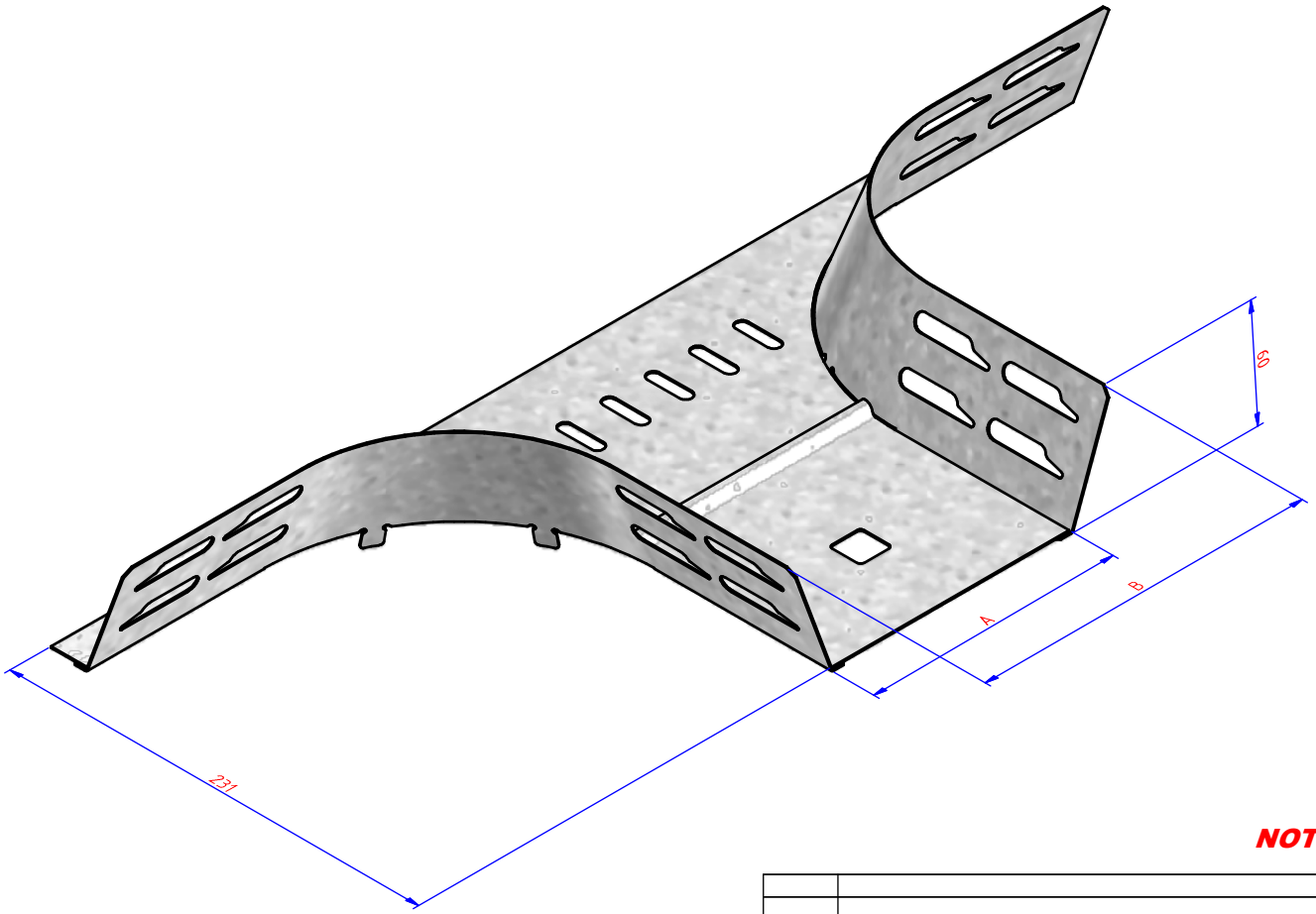

NOT FOR PRODUCTION

Ref	A	B
ASTI60.150	84	130
ASTI60.200	134	180
ASTI60.250	184	230
ASTI60.300	234	280
ASTI60.400	334	380
ASTI60.500	434	480
ASTI60.600	534	580

Number	Edition	Description of the modification	Date	Visum
1	A	Breedtes 500 en 600 toegevoegd (Zie WF KBSTI 60x___x__ 16 mrt 2011)	1/03/2011	

Ref.	ASTI60.---
VISUM	
Date	22/10/2009

Name
Aftakstuk 90° KBSTI
[ASTI60.200]

Material:	Tolerance:	Standard:	I.S.O. SYMBOL
1.0037 (Sendzimir)	-	-	

VERGOKAN
Meersbloem Melden 16
9700 Oudenaarde
Tel: 055/31.83.35
Fax: 055/31.43.88

Scale:

Adapt drawing exclusively with CAD

KBAAN

DRAWING NUMBER
45559

FORM
A4