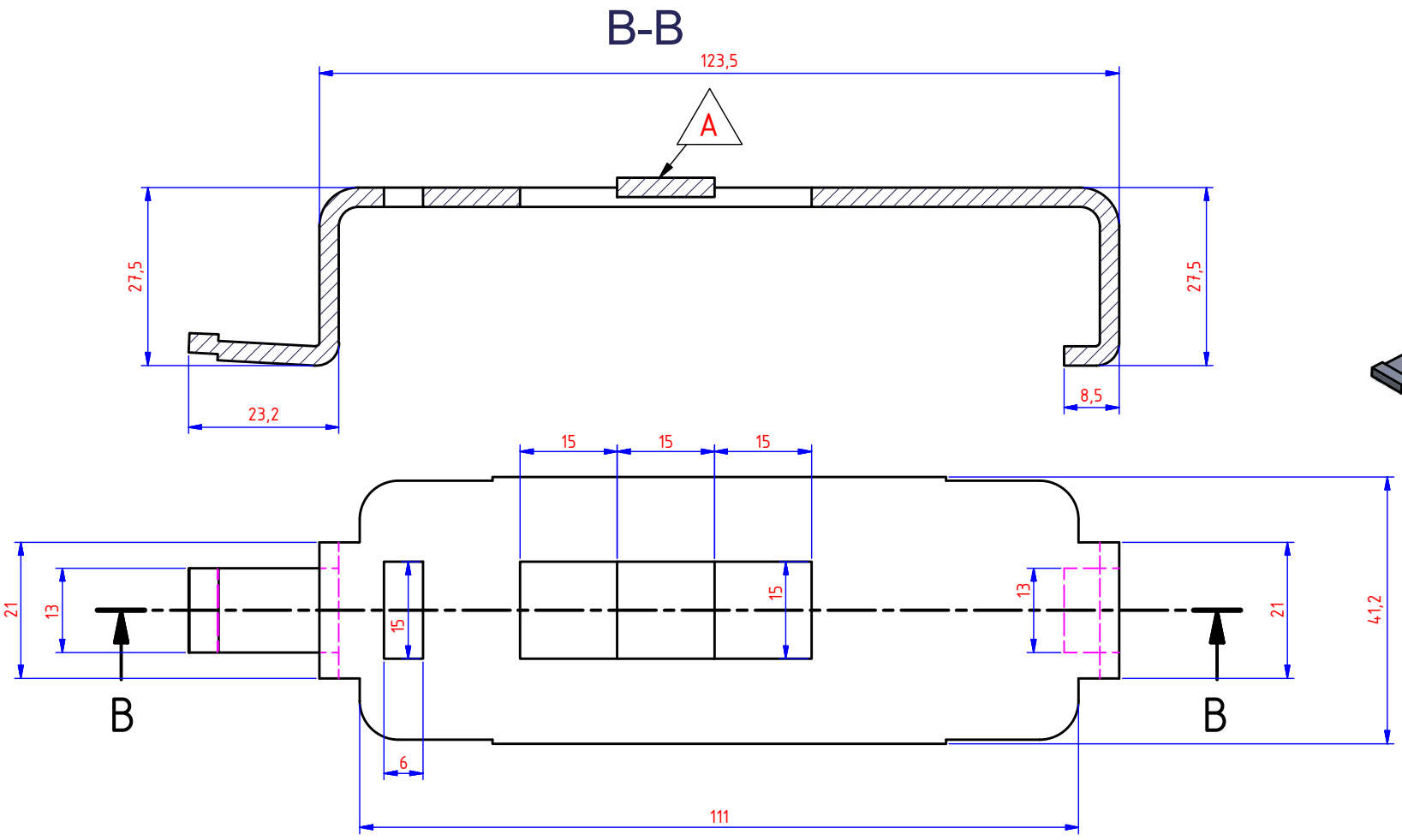

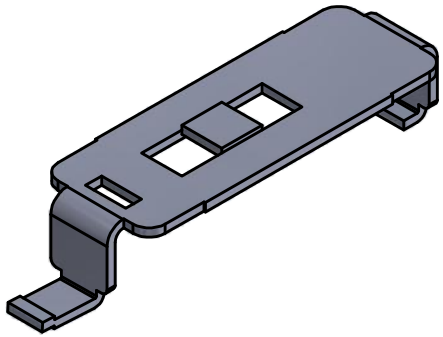

Material thickness: 3,00mm

NOT FOR PRODUCTION

Number	Edition	Description of the modification	Date	Visum
1	A	Doordrukking voor clipsen KCl 1,5mm doorgedrukt ipv 0,5mm	26/10/2004	

Ref.	CLHS	Name Clipsbaar verbindingsstuk [CLHS]			
VISUM					
Date	1/03/2000				
Material:	Tolerance:	Standard:	I.S.O. SYMBOL		
1.0037 (Sendzimir)	ISO 7168-M				

VERGOKAN

Meersbloem Melden 16
9700 Oudenaarde

Tel: 055/31.83.35
Fax: 055/31.43.88

Scale: 1/1	Adapt drawing exclusively with CAD		
DRAWING NUMBER 45734		FORM A4	P. 2 / 3 P.
			MONT