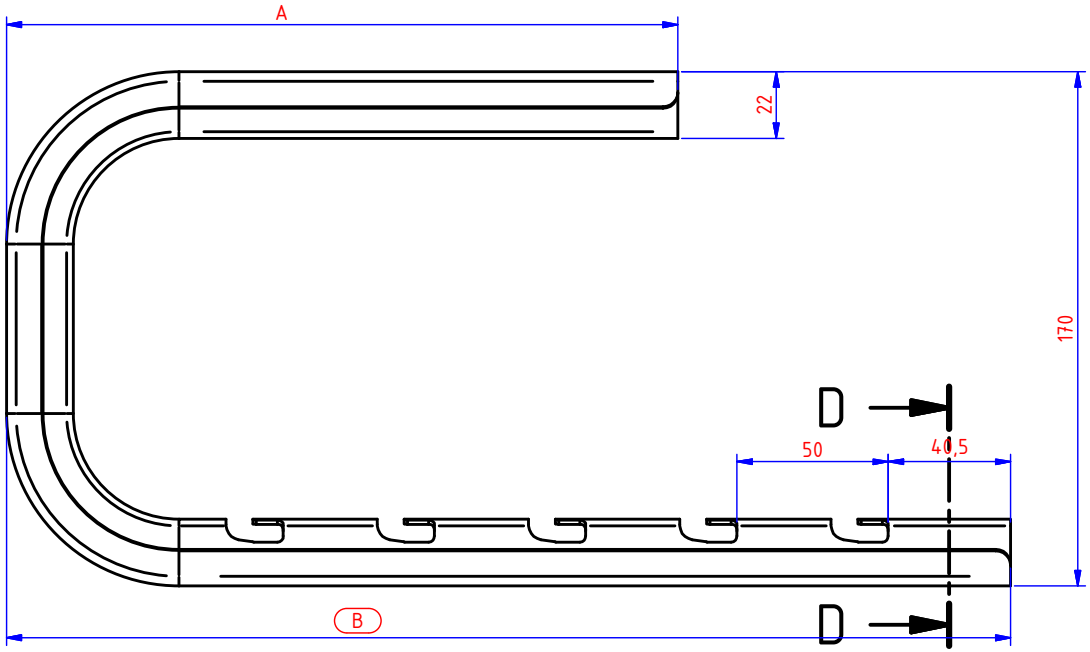

D-D (1 : 2.5)

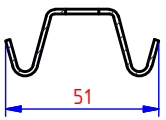

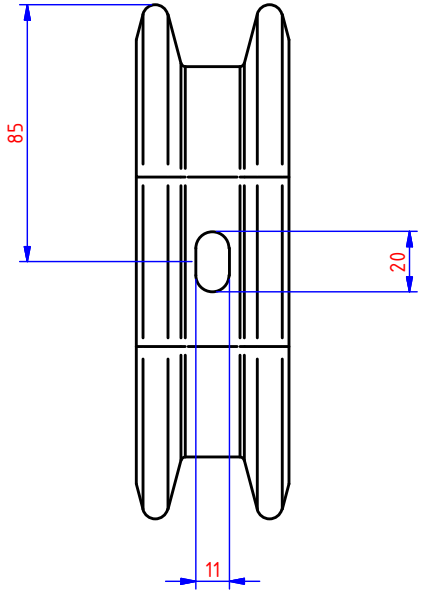

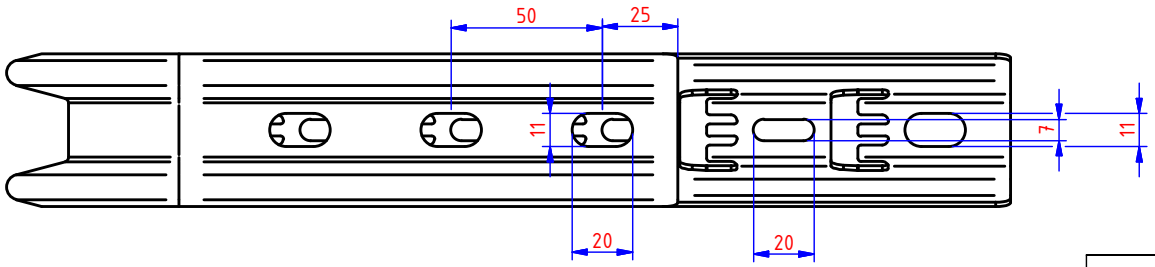

Dim table		
Ref.	A	B
COMEGACLU170.150	147	182
COMEGACLU170.200	172	232
COMEGACLU170.300	222	332
COMEGACLU170.400	272	432

NOT FOR PRODUCTION

Number	Edition	Description of the modification	Date	By

Ref.	COMEGACLU170x---	Name			
Drawn	LA	Clipsbare open ophangbeugel VFU/VFUL [COMEGACLU170.---]			
Date	9/03/2016				
Material:	Tolerance:	Standard: IEC 61537	I.S.O. SYMBOL		

VERGOKAN

Meersbloem Melden 16
9700 Oudenaarde

Tel: 055/31.83.35
Fax: 055/31.43.88

Scale: 1 : 2.5

Adapt drawing exclusively with CAD

MONT

DRAWING NUMBER 46137

FORM A4

P. 3

3 P.