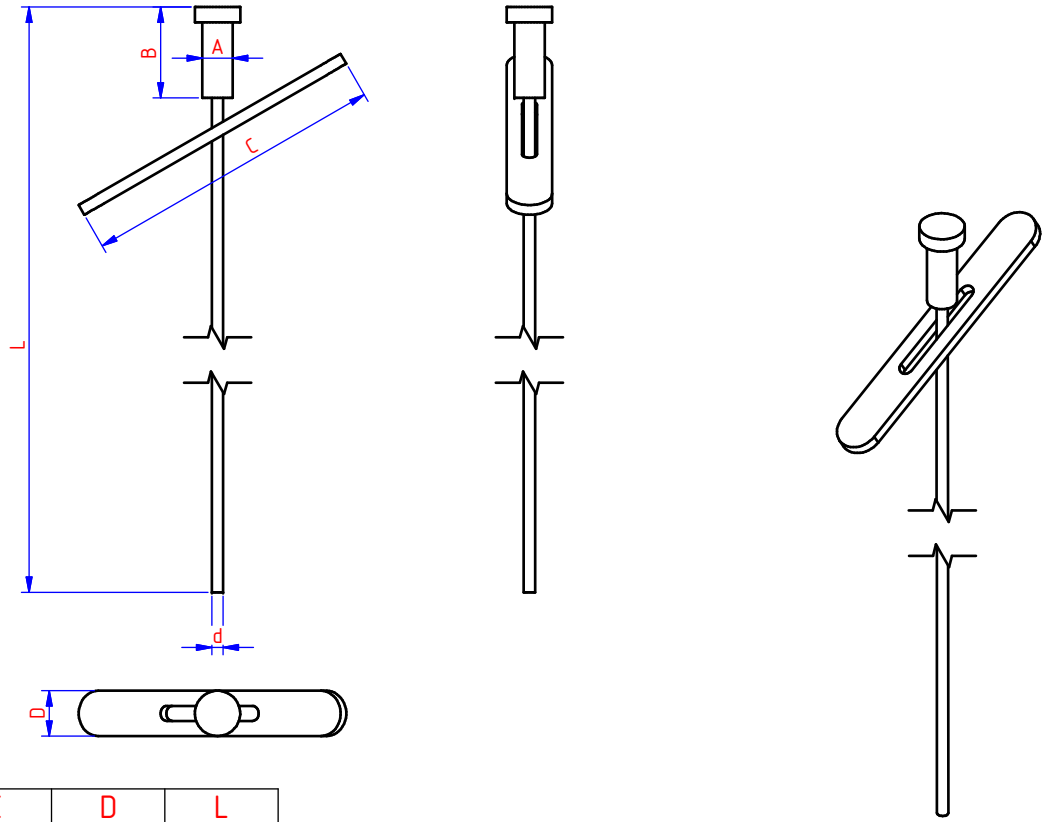

CS45TG- is suitable for hole Ø7
CS90TG- is suitable for hole Ø11

Ref.	d	A	B	C	D	L
CS45TG1	1.5	4	12	40	6	1000
CS45TG2	1.5	4	12	40	6	2000
CS45TG3	1.5	4	12	40	6	3000
CS45TG4	1.5	4	12	40	6	4000
CS45TG5	1.5	4	12	40	6	5000
CS45TG10	1.5	4	12	40	6	10000
CS90TG1	3	6	18	50	9.5	1000
CS90TG2	3	6	18	50	9.5	2000
CS90TG3	3	6	18	50	9.5	3000
CS90TG4	3	6	18	50	9.5	4000
CS9 TG5	3	6	18	50	9.5	5000
CS90TG10	3	6	18	50	9.5	10000

NOT FOR PRODUCTION

Number	Edition	Description of the modification	Date	By

Ref.	CS--TG-	Name	Kabelophanging, Dwarsanker [CS45TG1]
Drawn	colpaest		
Date	19/05/2014		

Material:	Tolerance:	Standard:	I.S.O. SYMBOL
Zinc plated			

VERGOKAN
Meersbloem Melden 16
9700 Oudenaarde
Tel: 055/31.83.35
Fax: 055/31.43.88

Scale: 1 : 1

Adapt drawing exclusively with CAD

MONT

DRAWING NUMBER 45886

FORM A4

P. 1

1 P.